# 41000 (Non-Ducted Only)

Broan range hoods provide the high quality you expect and the value you demand.

### STAINLESS

**24"** 412404
**30"** 413004
**36"** 413604
**42"** 414204

### BLACK

**21"** 412123
**30"** 413023
**36"** 413623

### WHITE MONOCHROME

**21"** 412101
**24"** 412401
**30"** 413001
**36"** 413601
**42"** 414201

### BISQUE

**21"** 412102
**24"** 412402
**30"** 413002
**36"** 413602
**42"** 414202

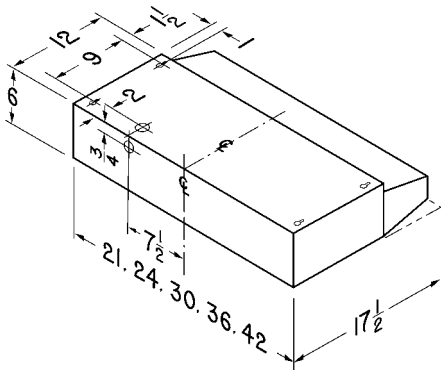


- Installs as non-ducted only with charcoal filter.
- Accepts up to 75-watt light (bulb sold separately).

**SPECIFICATIONS** / **OPTIONAL ACCESSORIES**

| Width | CFM | Sones | Volts | Amps | Duct | Charcoal Filter |
|---|---|---|---|---|---|---|
| 21", 24", 30", 36", 42" | N/A | N/A | 120 | 2.0 | Non-ducted | 41F |

HVI CERTIFIED

# Metal Backsplashes

Help keep your kitchen looking like new.

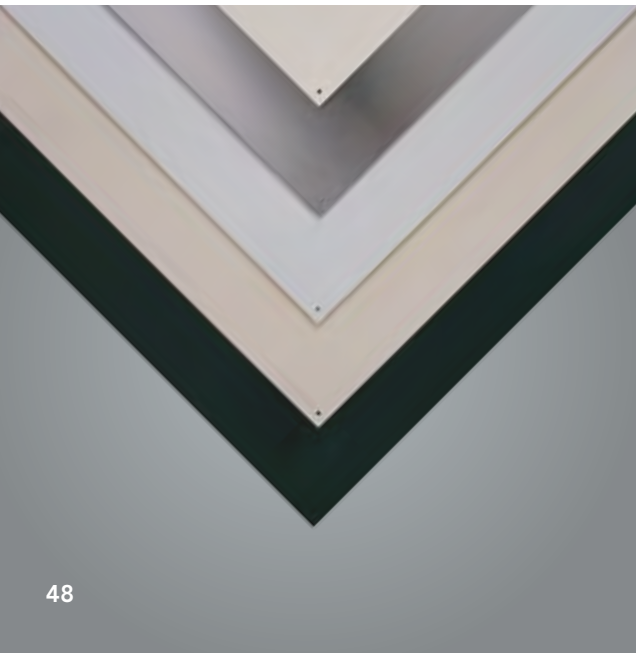

### STAINLESS STEEL

**24"** SP2404
**30"** SP3004
**36"** SP3604
**42"** SP4204

### REVERSIBLE BISQUE /BLACK

**24"** SP240223
**30"** SP300223
**36"** SP360223

### REVERSIBLE WHITE/ALMOND

**24"** SP240108
**30"** SP300108
**36"** SP360108

- Provides easy clean-up of cooking splatter.
- Durable, attractive appliance-matching finishes: Reversible White/Almond, Reversible Bisque/Black.
- Aluminum or 24-gauge stainless steel.
- Available in 24", 30", 36" or 42" widths; all are 24" high.
- Installs easily with four screws (not included).